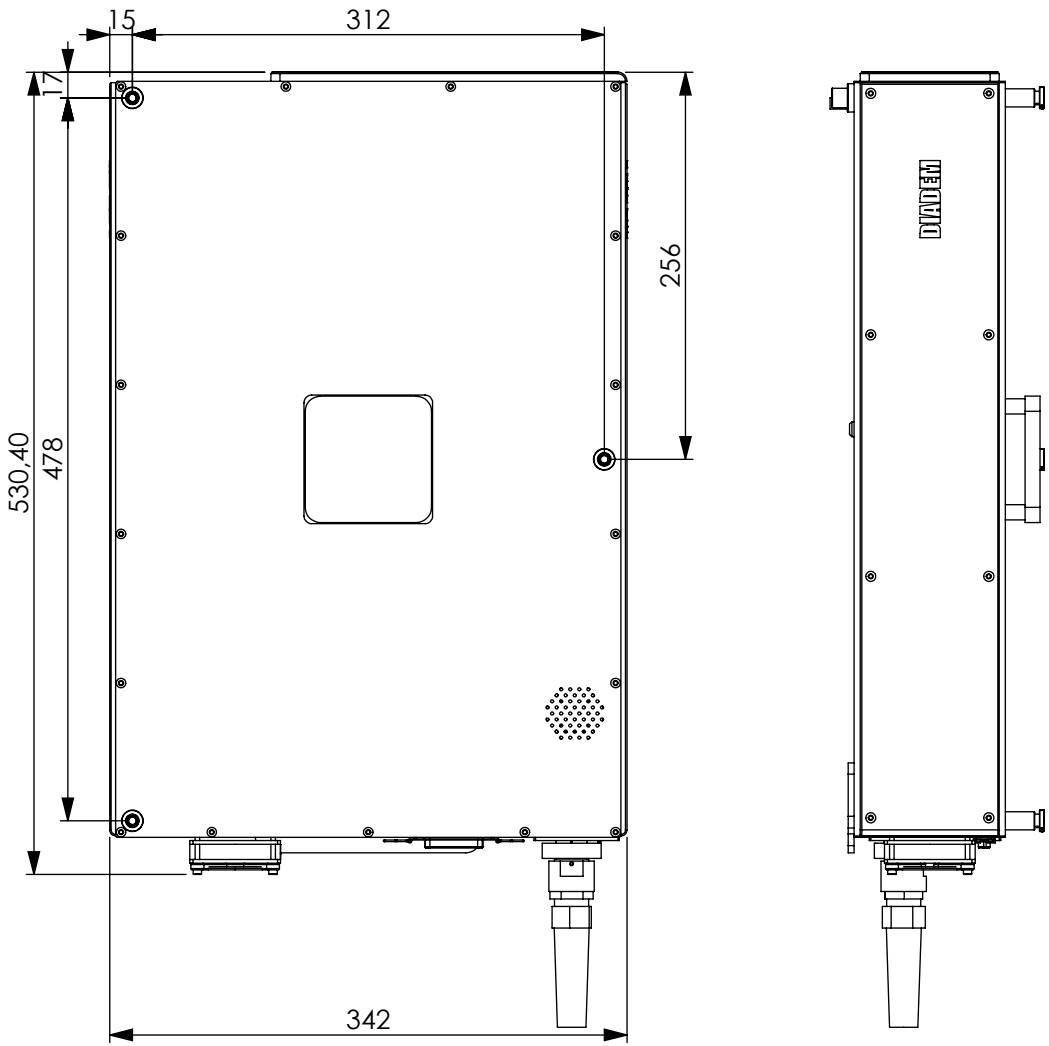
15
312
17
256
530,40
478
342

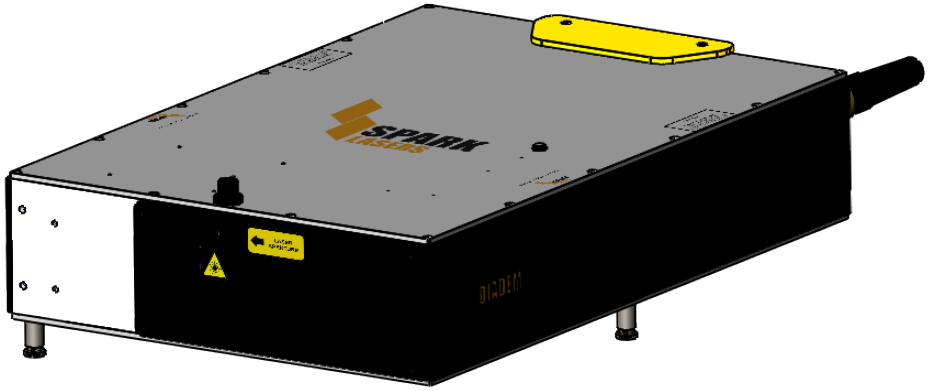
SPARK
LASERS

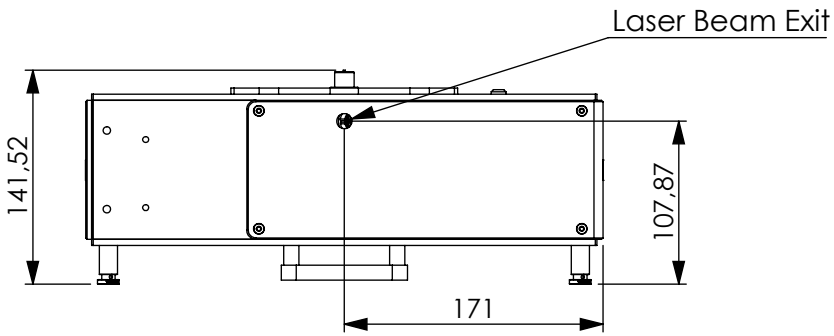
Laser Beam Exit
141,52
107,87
171