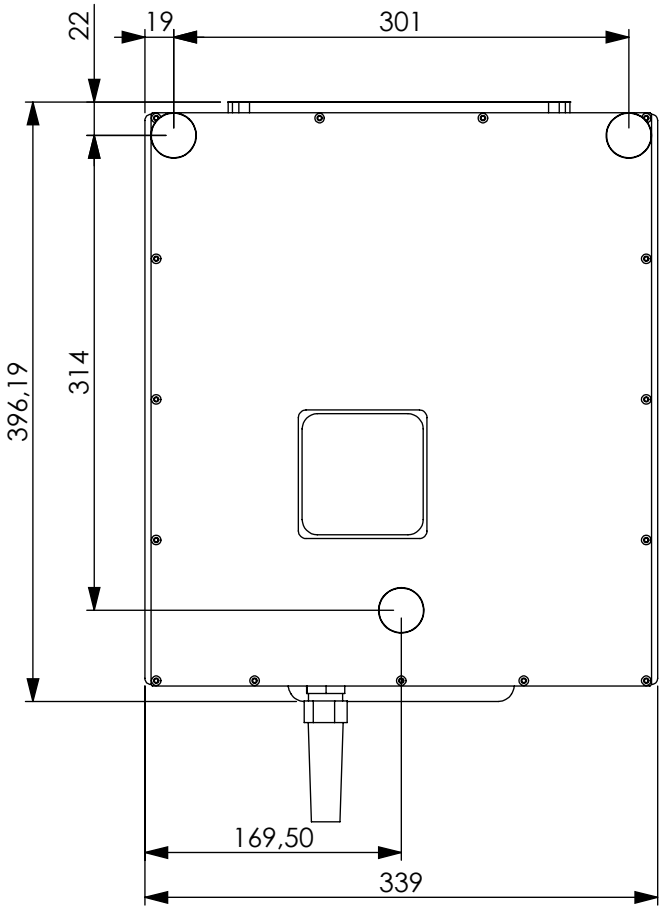
22
19
301
396,19
314
169,50
339

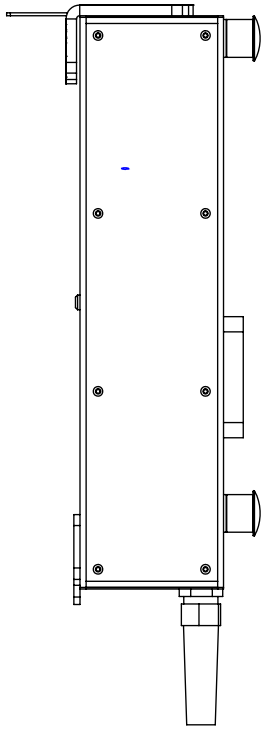

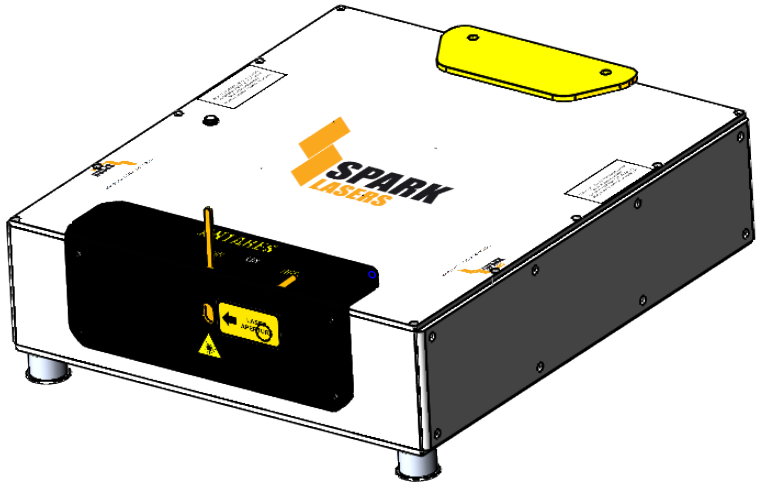
SPARK
LASERS

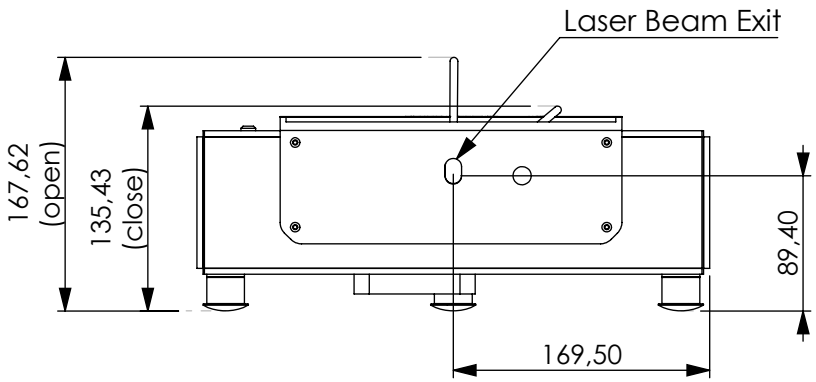
Laser Beam Exit
167,62
(open)
135,43
(close)
89,40
169,50