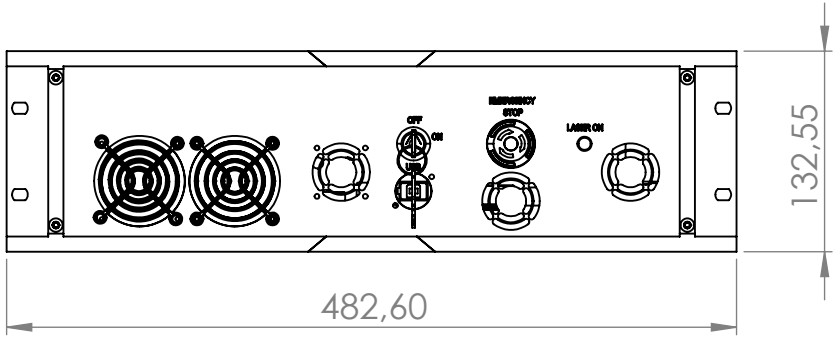
OFF
ON
EMERGENCY STOP
LASER ON
132,55
482,60

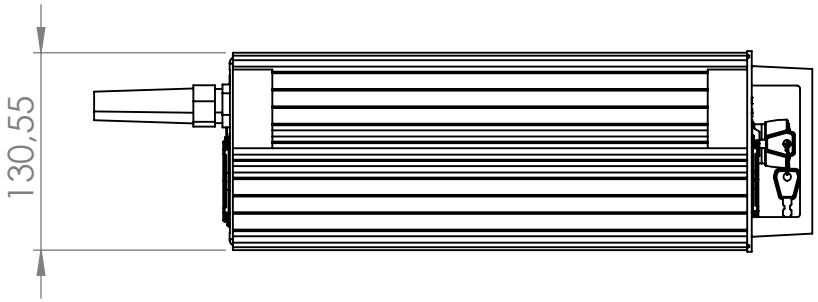
130,55

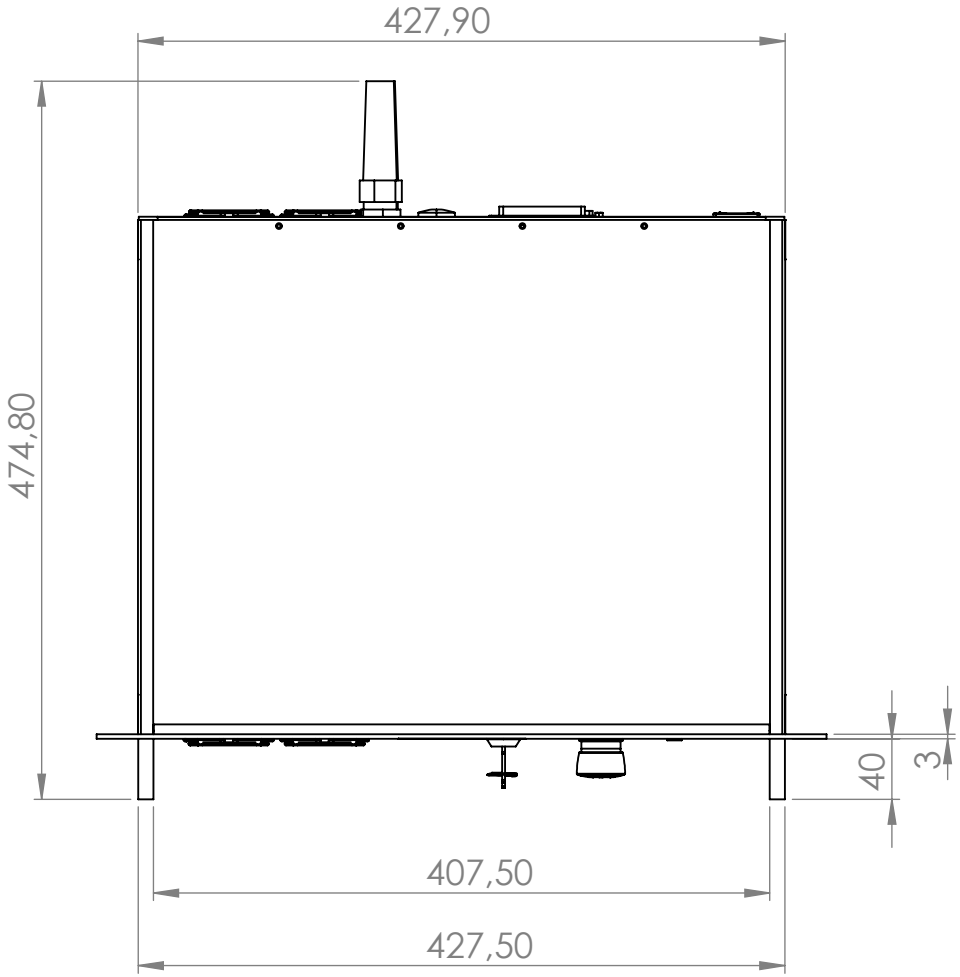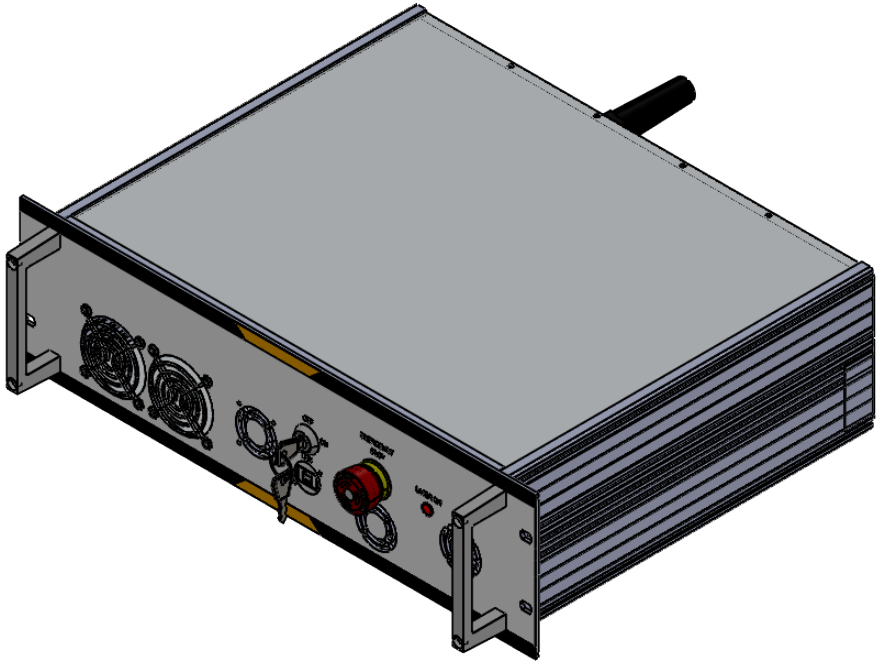
427,90
474,80
40
3
407,50
427,50